MITCHELL & BROWN

USER MANUAL

Model No.: JB-32CU1811HD

IMPORTANT
Please read this manual carefully before installing and operating the TV.
Keep this manual handy for further reference

Mitchell & Brown Customer Service Thank you for purchasing a Mitchell & Brown product.

Please register you warranty online at https://www.mitchellandbrown.co.uk/warranty/tv-warranty-registration-1-year/ or scan the QR code.

For any assistance you require with the product please call our Help Line on 01204 377 693 or visit www.mitchellandbrown.co.uk

PRECAUTION

1. Read these instructions.
2. Keep these instructions.
3. Heed all warnings.
4. Follow all instructions.
5. This apparatus with CLASS II construction
6. The ventilation should not be impeded by covering the ventilation openings with items, such as newspapers, table-cloths, curtains, etc.
7. No naked flame source, such as lighted candles, should be placed on the apparatus.
8. The apparatus shall not be exposed to dripping or splashing and that no objects filled with liquids, such as vases, shall be placed on the apparatus.
9. The batteries of remote controller shall not be exposed to excessive heat such as sunshine, fire or the like.
10. The plug or appliance coupler is used as the disconnect device, it shall remain readily operable.
11. To prevent the spread of fire, keep candles or other open flames away from this product.
12. Clean only with dry cloth.
13. Do not install this apparatus in windtight places such as the wall-unit. Do not block any ventilation openings.
14. Do not install near any heat sources such as radiators, heat registers, stoves, or other apparatus (including amplifiers) that produce heat.
15. Do not defeat the safety purpose of the polarized or grounding-type plug. A polarized plug has two blades with one wider than the other. A grounding type plug has two blades and a third grounding prong. The wide blade or the third prong are provided for your safety. If the provided plug does not fit into your outlet, consult an electrician for replacement of the obsolete outlet.
16. Only use attachments/accessories specified by the manufacturer.
17. Use only with the cart, stand, tripod, bracket, or table specified by the manufacturer,or sold with the apparatus. When a cart is used, use caution when moving the cart/apparatus combination to avoid injury from tip-over.
18. Unplug this apparatus during lightning storms or when unused for long periods of time.
19. Refer all servicing to qualified service personnel. Servicing is required when the apparatus has been damaged in any way, such as power-supply cord or plug is damaged, liquid has been spilled or objects have fallen into the apparatus, the apparatus has been exposed to rain or moisture, does not operate normally, or has been dropped.
20. USB Output rated to 0.5A under normal operation
21. Keep clear space of minimum distance as detailed below for sufficient ventilation
22. Use with caution in extreme or humid environments
23. Place TV in moderate temperature enviroments. Do not place near heaters, Air Conditioners or other sources of extreme temperature changes
24. When carrying or moving the TV, handle with care. Please use at least two hands or two people

Note: Parts of this manual may differ to actual unit

WARNING

Never place a television set in an unstable location. A television set may fall, causing serious personal injury or death. Many injuries, particularly to children, can be avoided by taking simple precautions such as:

- Using cabinets or stands recommended by the manufacturer of the television set.
- Only using furniture that can safely support the television set.
- Ensuring the television set is not overhanging the edge of the supporting furniture.
- Not placing the television set on tall furniture (for example, cupboards or bookcases) without anchoring both the furniture and the television set to a suitable support.
- Not placing the televisions set on cloth or other materials that may be located between the television set and supporting furniture.
- Educating children about the dangers of climbing on furniture to reach the Television set or its controls.

If your existing television set is being retained and relocated, the same considerations as above should be applied.

IMPORTANT INFORMATION

If a television is not positioned in a sufficiently stable location, it can be potentially hazardous due to falling. Many injuries, particularly to children, can be avoided by taking simple precautions such as:

- Using cabinets or stands recommended by the manufacturer of the television.
- Only using furniture that can safely support the television.
- Ensuring the television is not overhanging the edge of the supporting furniture.
- Not placing the television on tall furniture (for example, cupboards or Bookcases) without anchoring both the furniture and the television to a suitable support.
- Not standing the televisions on cloth or other materials placed between the television and supporting furniture.
- Educating children about the dangers of climbing on furniture to reach the television or its controls.

⚠ CAUTION

Danger of explosion if battery is incorrectly replaced.
Replace only with the same or equivalent type.
Batteries shall not be exposed to excessive heat such as sunshine, fire or the like.
Used batteries should not be thrown into the garbage can, please leave them at an appropriate depot.

⚠ CAUTION

Where the MAINS plug or an appliance coupler is used as the disconnect device, the disconnect device shall remain readily operable.

⚠ CAUTION

These servicing instructions are for use by qualified service personnel only. To reduce the risk of electric shock, do not perform any servicing other than that contained in the operating instructions unless you are qualified to do so.

Attention:

Motionless picture might cause permanent destruction to the display.

- Be sure not to display motionless picture on the LED TV for more than 2 hours, because it would cause picture remnants to appear, which is called "screen burns". To avoid such picture remnants, please decrease the "contrast" and "brightness" of the display when displaying motionless picture.
- While watching TV program in 4:3 size mode for a long time, there would . be traces on the edge of the screen's left, right and center parts because of different transmission of the light on the screen.Similar impact on the screen will occur when playing DVD or connecting games console. Products destroyed by these reasons can't be guaranteed for maintenance.

- Place the TV on a firm and flat surface,leaving a space of at least 10cm around the set and 30cm from the top of the set to the wall or cabinet.Ensure the TV is positioned close to the wall to avoid it falling when pushed.

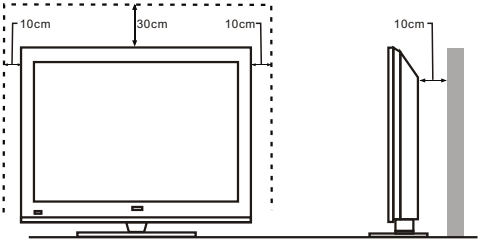

- When turning the TV unit, do not hold the TV unit from the top of the unit. Hold the TV unit from the bottom of the unit. As shown below

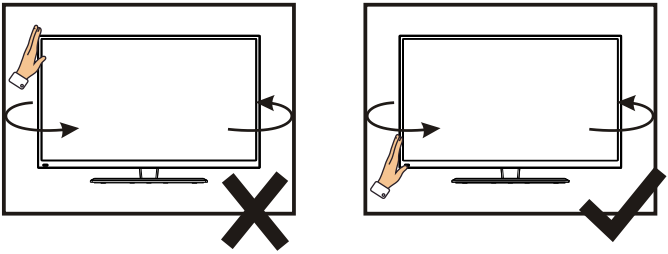

- When lifting the TV unit, do not use one hand to handle the TV unit. Lift the TV unit with two hands

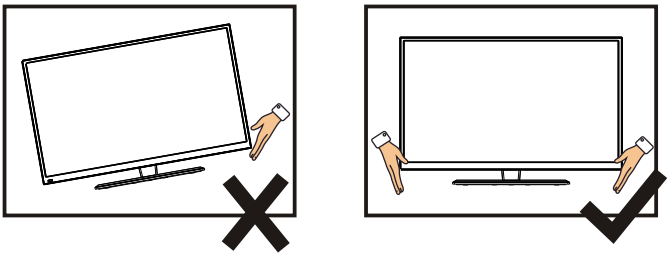

CONTENTS

1. Connection and Preparation of TV.....2
1.1 Accessories 2
1.2 Installation of Stand.....2
1.3 Wall Mount Specificatiolns 3
1.4 Keys and Interfaces 4
1.5 Remote Control.....5
1.6 Installation of Batteries.....6
2. Basic Operation.....6
2.1 Power ON/OFF(Optional).....6
2.2 Setting of Standby Mode.....6
3. Home page.....7
4. TV Setting 8
5. Media.....16
6. Technical Specification.....18
7. Support Signal Modes.....19
8. Simple Troubleshooting 20

1.Connection and Preparation of TV

1.1 Accessories

- User Manual
- Remote Control
- Battery(LR6/AA)
- Wall Mount Kit (Pre-assembled)(Optional)

1.2 Installation of Stand

(For the physical structure, please refer to the real object)

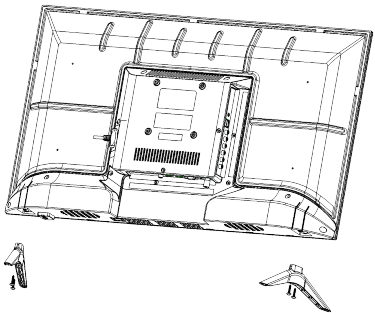

① Place the TV with the front panel facing downwards on the soft cloth or soft pads on a desk.

② Insert the stand into the bottom socket of the TV.

③ Insert the screws into the sockets and tighten them.

1.3 Wall Mount Specifications

Compatible wall-mount size	Screw size for connecting the TV to the wall mount
VESA 100*100	PWM4 Screws,length 6mmx2pcs* PWM4 Screws,length 12mmx2pcs*
** The length of the screw specified is only a recommendation; actual length required can vary depending on the type of wall mount used.*	

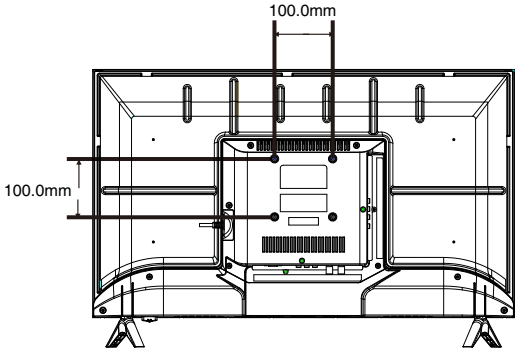

Note:

1. The wall mount is not included with the TV; it needs to be purchased separately.
2. Use only VESA-compatible wall mounts according to the specifications recommended for this model. Use of other wall mounts, or inappropriate installation may cause personal injuries or damage to the TV.
3. Please follow all instructions from the user manual of your chosen wall mount.

1.4 Keys and Interfaces

The design and specification takes actual products as the standard

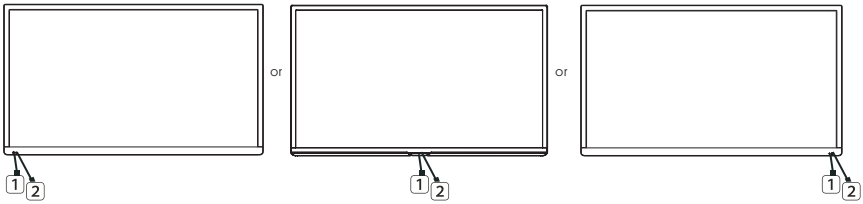

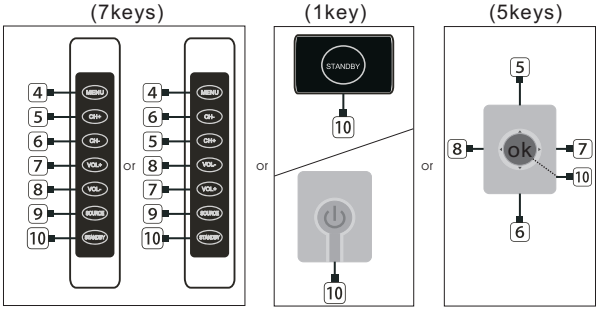

1. REMOTE SENSOR WINDOW
2. POWER INDICATOR
3. SPEAKER
4. MENU KEY
5. PROGRAM “+” KEY
6. PROGRAM “-” KEY
7. VOLUME “+” KEY
8. VOLUME “-” KEY
9. SOURCE KEY
10. STANDBY KEY
11. POWER PLUG INPUT

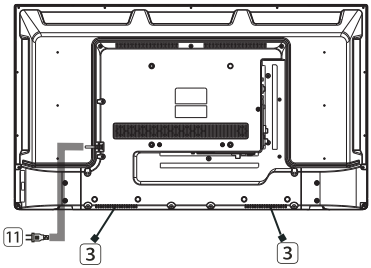

HDMI3		HDMI2 (ARC)		HDMI1		USB2 USB1 5V ⎓500mA		EARPHONE
RJ45	OPTICAL	AV IN				RF IN (S2) 13V/18V⎓500mA		RF IN (T2)
		VIDEO	L	R				

1.5 Remote Control

For buttons with #, please long-press (hold for more than a second).

POWER: ON/OFF.

(STB POWER) You can turn on/off the power of the set-top box.

0-9: Number **selection key.**

0 # :The QUICK ACCESS edit screen appears.

LIST: Checking the saved programmes.

• • • :It displays the additional buttons on the remote control.

• • • #: Audibly describes the contents of the screen.

: It adjusts the volume level.

: Select to turn off the sound from the TV.

#: Enter the Accessibility menu.

: You can change the programme.

: Check out the recommended contents. (Recommendation ervice may not be available depending on the countries you are in.)

Push and hold the button while speaking to use the voice recognition function.

: Displays the Home menu.

#: Displays the list used previously.

: Enters the Quick Settings menu.

: Enters the All Settings menu.

Wheel (OK) :Press the center of thd Wheel button to select a menu.You can change channels by using the wheel button.

(up/down/left/right) Press the up,down,left or right button to scroll the menu.If you press △▽◁ ▷ buttons while the pointer is in use,the pointer will disappear from the screen and Magic Remote will operate like a general remote control.To display the pointer on the screen again,shake Magic Remote the left and right.

: Move to the previous step.

: Closes the menu.

GUIDE : You can check the programme.

NETFLIX : go to Netflix.

: Selects an input source.

#: Entering into the Home Dashboard.

prime video : go to prime video.

, , , These access special functions in some menus.

Play :FreeView Play APP Execution.

▷ : Play.

|| : Pause.

1.6 Installation of Batteries

(Here is only the sketch, please in kind prevail)

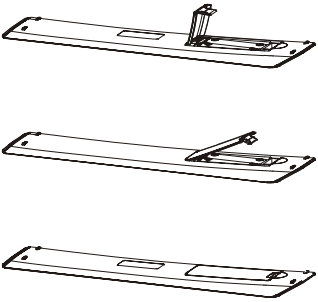

① Open the back lid of the remote control.

② Install two 5#(AA)1.5V, batteries.
Ensure the correct polarity of the batteries.

③ Cover the back lid.
Please take out of the batteries from the remote control for long time of no use.

If the remote control doesn't work properly, please carry out the following checks.

- Check the TV is turned on.
- Check the polarity of the batteries are correct.
- Check the batteries are not drained.
- Check the power supply is normal or the power cord is correctly connected.
- Check there are no special fluorescent light or neon light around.

2. Basic Operation

2.1 Power ON/OFF(Optional)

- Connect the power cord to the **AC input**. Insert the power cord into the appropriate socket.
- Press the **Power switch** to switch on the TV, then press **Power** button to turn on the unit.
- Press the **Power switch** again to switch off the TV.

Note: After switch off the TV, please don't immediately re-open the power switch ,should be delayed one minute more to re-open the power switch.

2.2 Setting of Standby Mode

- Press (⏻) button to turn on the unit.
- Press (⏻) button again to return the display to standby mode. The power indicator turns red.
- Be sure not to set your TV in standby mode for a long period of time.

3. Home page

Enter the Home page after First Time install.
In the list of apps, select the app you want to enter.

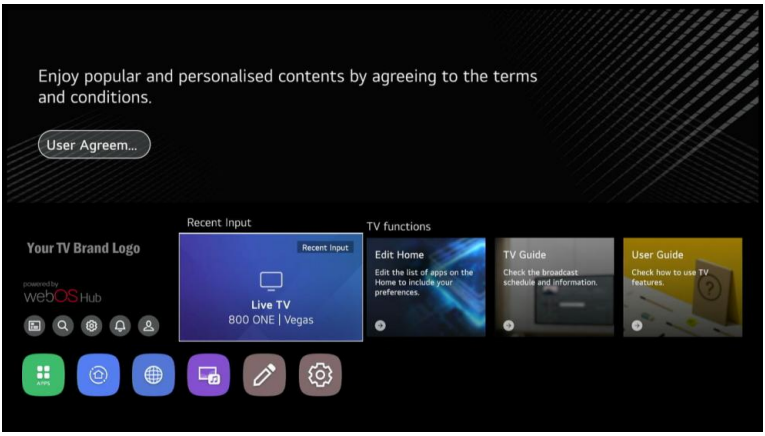

Using Home Hub

Press ▼ / ▲ /◄ / ► button to select Home Hub or press INPUT button to use Home Hub.
You can select or control a device (mobile, Bluetooth, external device, etc.) connected to the TV.
Press ▼ / ▲ /◄ / ► button to select .

TV/Input

1. You can play sound from a smart device connected via Bluetooth.

   Please refer to Connecting External Devices → Playing Sound from a Smart Device through the TV's Speakers in User Guide for more information on the action.

2. You can check and select the external device connected through the external input port or network.

Connect Mobile Device

You can check and select the smart device connected with the LG ThinQ app.

Please refer to Connecting External Devices → Connecting Smart Devices in User Guide for more information on the action.

4.TV Setting

Press **MENU** button to enter the TV Setting.

Press ▼ / ▲ /◄ / ► button to highlight the desired menu icon , and press OK button to select.

Quick Settings

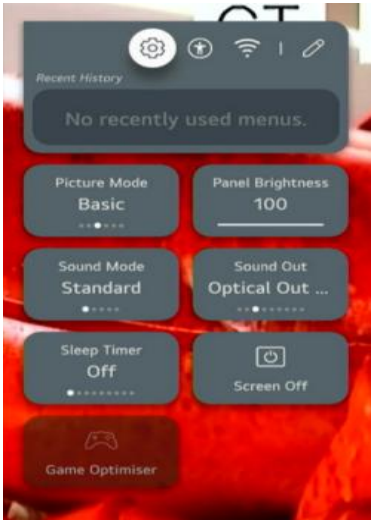

① You can set **Picture Mode**.

② You can set **Panel Brightness**.

③ You can set **Sound Mode**.

④ You can choose **Sound Out**.

⑤ You can choose **Sleep Timer**.

⑥ You can choose **Screen Off**.

⑦ You can set **Game Optimizer**.

⑧ You can add/delete the quick setting items or change their order.

All Settings

Press ▼ / ▲ /◄ / ► button to select the All Settings

Press the <OK> key to enter the sub-menu.

Press ▼ / ▲ button to select Picture/Sound/General/Support.

Picture

Press ▼ / ▲ button to select Picture.Press **OK** button to enter sub-menu and setup.

Select Mode

Press ▼ / ▲ button to select the Select Mode.

Press the <OK> key to enter the sub-menu.

Press ▼ / ▲ button to select Vivid/Standard/Basic/Cinema/Sports/Game Optimiser.

Aspect Radio

You can change the screen size according to the type of content you are watching.

Press ▼ / ▲ button to select User Selection/ Just Scan.

User Selection

Press ▼ / ▲ button to select Aspect Ratio.

Just Scan

Press ▼ / ▲ button to select Just Scan.

If you turn this feature **On**, you can view the content in the aspect ratio that is in the broadcast signal or content source. If the edge of the screen is not clean, please turn it **Off**.

Advanced Settings

Press ▼ / ▲ button to select the Advanced Settings.

Press the <OK> key to enter the sub-menu.

Press ▼ / ▲ button to select Brightness/Color/Clarity/Apply to all inputs/Reset.

Sound

Press ▼ / ▲ button to select Sound.Press **OK** button to enter sub-menu and setup.

Select Mode

Press ▼ / ▲ button to select the Select Mode.

Press the <OK> key to enter the sub-menu.

Press ▼ / ▲ button to select.

Sound Out

Press ▼ / ▲ button to select the Sound Out.

Press the <OK> key to enter the sub-menu.

Press ▼ / ▲ button to select

Advanced Settings

Press ▼ / ▲ button to select the Advanced Settings.

Press the <OK> key to enter the sub-menu

Press ▼ / ▲ button to select.

Balance

Balanced left and right channels.

Press OK button to select Balance.Press ▼ / ▲button to adjust.

Equalizer

Press ▼ / ▲ button on to select Equalizer.
Press OK button to enter sub-menu then press▼ / ▲ ◄ / ► button to adjust.

Apply to All Inputs

Press ▼ / ▲ button on to select Apply to All Inputs.

Reset

You can reset the sound effect settings.

Press ▼ / ▲ button to select Reset.

Installation Type

Press ▼ / ▲ button on to select Installation Type.

Press ▼ / ▲ button to select Stand/ Wall-mounted.

Automatic Volume Adjustment

Press ▼ / ▲ button on to select Auto Volume.Press **OK** button to select On/Off.

DTV Audio Setting

Press ▼ / ▲ button on to select DTV Audio Setting.

Press ▼ / ▲ button to select MPEG/ Dolby Digital/ Dolby Digital Plus/ HE-AAC/ Auto.

Match Screen and Sound

Press ▼ / ▲ button on to select Match Screen and Sound.

Select HDMI Input Audio Format

Press ▼ / ▲ button on to select HDMI Input Audio Format.
You can set the audio format for each HDMI input. When the voice delivered through the HDMI port is not synchronized, set it to **PCM**.

Digital Sound Output

Press ▼ / ▲ button on to select Digital Sound Out.

eARC Support

Press ▼ / ▲ button on to select eARC Support.

General

Press ▼ / ▲ button to select General.Press **OK** button to enter sub-menu and setup.

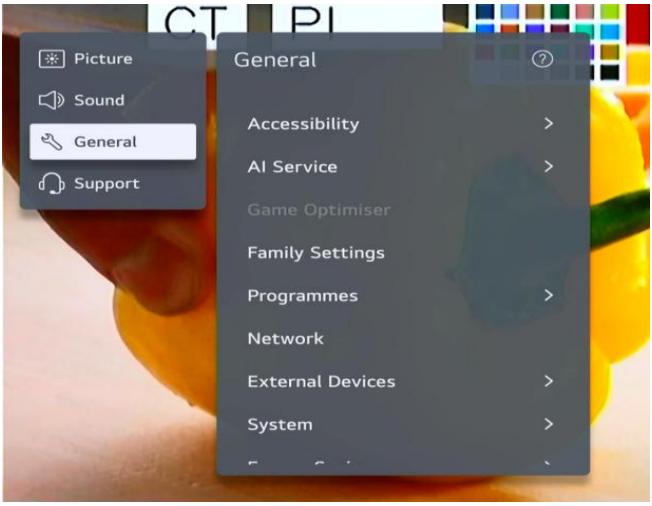

Accessibility

Press ▼ / ▲ button to select Accessibility.Press OK button to enter sub-menu.

Audio Description Volume

Press ▼ / ▲ button to select Audio Description volume .Press OK button to select.

Learn Remote Control

Press ▼ / ▲ button to select Learn Remote Control.

Enjoy TV Sound Together

Press ▼ / ▲ button to select Enjoy TV Sound Together.Press ▼ / ▲ button to select.

Hard of Hearing

Press ▼ / ▲ button to select Hard of Hearing.Press OK button to select On/Off.

Subtitles

Press ▼ / ▲ button to select Subtitles.Press ▼ / ▲ button to select Subtitle First Choice Language and Subtitle Second Choice Language and press OK button to setup the language.

High Contrast

Press ▼ / ▲ button to select High Contrast.Press OK button to select On/Off.

Greyscale

Press ▼ / ▲ button to select Greyscale.Press OK button to select On/Off.

Invert Colours

Press ▼ / ▲ button to select Invert Colours.Press OK button to select On/Off.

AI Service

You can enable the recommended services based on the usage history.

Press ▼ / ▲ button to select AI Service.Press OK button to enter sub-menu.

Game Optimizer

Press ▼ / ▲ button on to select Game Optimizer.

Family Settings

Press ▼ / ▲ button on to select Family Settings.

Press ◄ / ► button to select Usage Limit Setting/ Eye Care Mode/ Volume Limit Mode/ Screen Time Report.Press OK button to enter sub-menu.Press OK button to enable the function.

Programmes

Press ▼ / ▲ button on to select Programmes.Press OK button to enter sub-menu.

Network

Press ▼ / ▲ button on to select Network.

External Devices

Press ▼ / ▲ button on to select External Devices.Press OK button to enter sub-menu.

System

Press ▼ / ▲ button on to select System.Press **OK** button to enter sub-menu and setup.

Language

You can choose the menu language displayed on the screen and the audio language of the digital broadcast.

Press ▼ / ▲ button to select Language.Press OK button to enter sub-menu.

Location

You can change the location setting of your Smart TV.

Press ▼ / ▲ button to select Location.Press OK button to enter sub-menu.

Time & Timer

You can check the time or configure related settings.

Press ▼ / ▲ button to select Time.Press **OK** button to enter sub-menu.

Safety

Press ▼ / ▲ button to select Safety.Press OK button to enter sub-menu.

All the Options are available only when the Safety select On.

The initial password is set as “0000”.

Press ▼ / ▲ button to select the option then press **OK** button to setup.

Additional Settings

Press ▼ / ▲ button to select Additional Settings.Press OK button to enter sub-menu.

Reset to Initial Settings

Press ▼ / ▲ button to select Reset to Initial Settings.Press OK button to enter sub-menu.

Return TV to its initial settings. This will revert all settings to their default values.

After reset, the TV will automatically turn off and on.

Note：If Safety is set to On, you should type the password to Reset to Initial Settings.

Energy Saving

Reduces power consumption by adjusting screen brightness.

Press ▼ / ▲ button to select.

Support

Highlight the item and press OK button to enter the sub-menu.

Press ▼ / ▲ button to select Support.

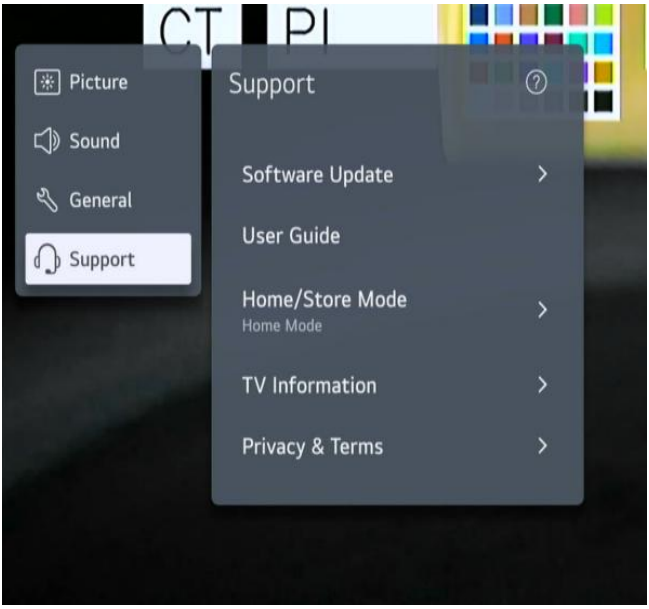

Software Update

Uses software update to check and obtain the latest version.

Press ▼ / ▲ button to select Software Update.Press **OK** button to enter sub-menu.

Then press ▼ / ▲ button to select and setup.

User Guide

Press ▼ / ▲ button to select User Guide.Press **OK** button to enter sub-menu.

Then press ▼ / ▲ button to select and setup.

Home/Store Mode

Press ▼ / ▲ button to select Home/Store Mode.Press **OK** button to enter sub-menu.

Then press ▼ / ▲ button to select and setup.

TV Information

Press ▼ / ▲ button to select TV Information.

Privacy & Terms

Press ▼ / ▲ button to select Privacy & Terms.Press **OK** button to enter sub-menu.

Then press ▼ / ▲ button to select and setup.

5. Media

Connect a USB storage device (USB HDD, USB stick) to the USB port on the TV to enjoy the content files stored on the USB storage device on your TV.

Press ▼ / ▲ button on to select Photo & Video/Photo/Video/Music.

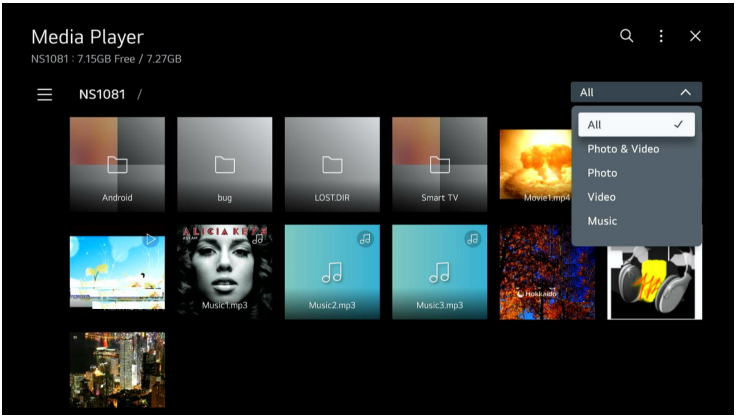

Photo

Selecting a photo in the Photo & Video app runs the photo player. You can view your saved photos.

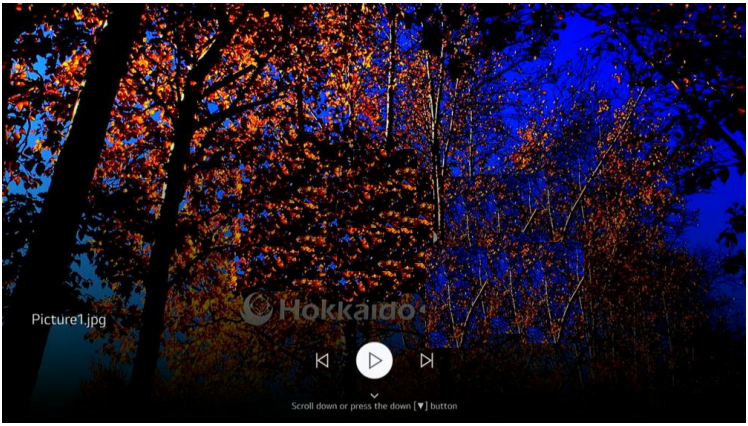

Video

Selecting a video in the Photo & Video app runs the video player. You can view your saved videos.

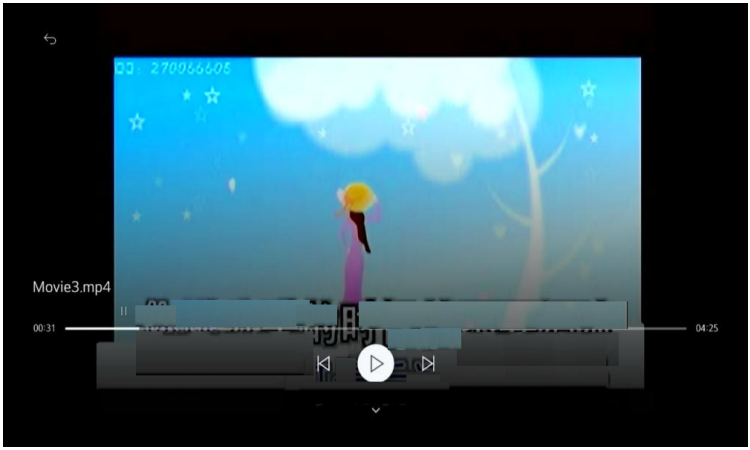

Music

You can play music conveniently by selecting the music files saved in the Music app or by selecting the music player icon during content playback in apps such as Photo & Video.

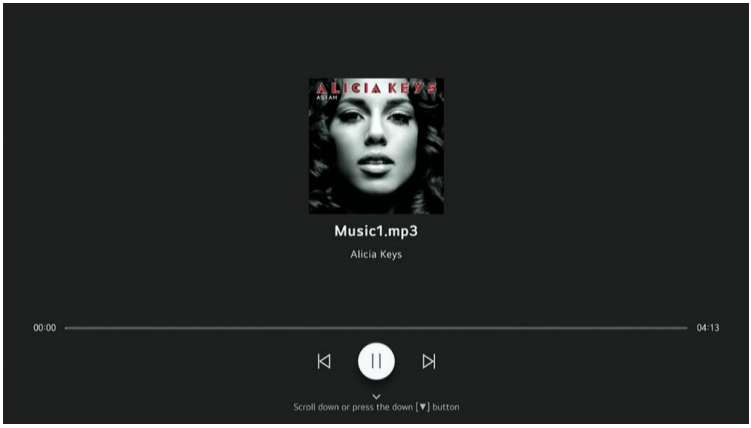

6.Technical Specification

Product Model	JB-32CU1811HD	
Screen Size	32” diagonal	
Aspect Ratio	16:9	
Power Supply	AC 100-240V~,50/60Hz	
Power Consumption	60W	
TV System	PAL B/G D/K I,SECAM B/G D/K DVB-T/T2/C/S/S2(s/s2 option) (There is no DVB-C signal in some Countries or Areas.)	
Audio Output Power (Internal)	8Wx2	
Input Terminal	Antenna Input	x 2 (S2 option)
	USB Input	x 2
	HDMI Input	x 3
	VGA Input	NO
	PC AUDIO Input	NO
	Audio Input (L/R)	x 1
	Video Input	x 1
	YPbPr Input	NO
	RJ45 Input	x 1
	CI card In	x 1
	SCART In/Output	NO
	DC In (12V)	NO
	CARD SLOT	NO
Output Terminal	Earphone	x 1
	Audio Line Out(L/R)	NO
	Video Output	NO
	Optical	x 1
	Coaxial out	NO
Working Temperature	0℃~40℃	
Working Humidity	20% ~ 80% Non-condensing	

Note:the specification shown above may change without notice for quality improvement.

Dolby AUDIO

Manufactured under license from Dolby Laboratories. Dolby, Dolby Audio, and the double-D symbol are trademarks of Dolby Laboratories Licensing Corporation.

7. Supported Signal Modes

A.HDMI Mode

Resolution	Horizontal Frequency (Khz)	Vertical Frequency (Hz)
480p	31.468	59.94
576p	31.25	50.00
720P	45.00	60.00
1080i	33.75	60.00
1080P(1920x1080)	67.50	60.00

-When the signal received by the Display exceeds the allowed range, a warning message will appear on the screen.
-You can confirm the input signal format onscreen.

HDMI™
HIGH-DEFINITION MULTIMEDIA INTERFACE

The terms HDMI, HDMI High-Definition Multimedia Interface, HDMI trade dress and the HDMI Logos are trademarks or registered trademarks of HDMI Licensing Administrator, Inc.

8. Simple Troubleshooting

If the display fails or the performance changes dramatically, check the display in accordance with the following instructions. Remember to check the peripherals to pinpoint the source of the failure.

Symptom	Solution
Power cannot be turned on.(Power indicator does not light.)	-Check that both ends of the power cable are plugged into the socket appropriately and the wall socket is operational
No Input Signal message appears.	-Check that the signal line is connected properly. -Check that the power of the relevant peripherals is turned on. -Check that the Input option that has been selected matches with the input signal.
The remote control does not function properly.	-Check the batteries are not drained.(Use new batteries.) -Check that the remote control is within the operating range. -Check that the remote control is pointed to the remote control window on the display. -Check that there are no obstacles between the remote control and the remote control window.
Flashing spots or stripes appear on the screen.	-Check that there are no emission (Car, HV cable or Neon lamp) or other possible interference sources.
Image colour or quality deteriorates.	-Check that all the video settings are adjusted appropriately, such as brightness, contrast, colour etc. -For more information about video settings, refer to OSD Functions in Chapter 2.
Screen position and size are incorrect.	-Check that the screen position and size is adjusted appropriately.
Image or colour is incorrect.	-Check that the signal line is connected properly. -When connecting to a PC, you can change the resolution of the PC to acquire the correct image. The discrepancy of the PC output signal may affect the display of the image.
Display warning message.	-Check that the input signal line is properly fixed. -Select the correct input signal. -For more information, refer to Supported Signal Modes in Chapter 4.