MITCHELL & BROWN

# USER MANUAL

Model No.: JB-43CE1811HD

**IMPORTANT**
Please read this manual carefully before installing and operating the TV.
Keep this manual handy for further reference

Mitchell & Brown Customer Service Thank you for purchasing a Mitchell & Brown product.

Please register you warranty online at https://www.mitchellandbrown.co.uk/warranty/tv-warranty-registration-1-year/ or scan the QR code.

For any assistance you require with the product please call our Help Line on 01204 377 693 or visit www.mitchellandbrown.co.uk

# PRECAUTION

1. Read these instructions.
2. Keep these instructions.
3. Heed all warnings.
4. Follow all instructions.
5. This apparatus with CLASS II construction
6. The ventilation should not be impeded by covering the ventilation openings with items, such as newspapers, table-cloths, curtains, etc.
7. No naked flame source, such as lighted candles, should be placed on the apparatus.
8. The apparatus shall not be exposed to dripping or splashing and that no objects filled with liquids, such as vases, shall be placed on the apparatus.
9. The batteries of remote controller shall not be exposed to excessive heat such as sunshine, fire or the like.
10. The plug or appliance coupler is used as the disconnect device, it shall remain readily operable.
11. To prevent the spread of fire, keep candles or other open flames away from this product.
12. Clean only with dry cloth.
13. Do not install this apparatus in windtight places such as the wall-unit. Do not block any ventilation openings.
14. Do not install near any heat sources such as radiators, heat registers, stoves, or other apparatus (including amplifiers) that produce heat.
15. Do not defeat the safety purpose of the polarized or grounding-type plug. A polarized plug has two blades with one wider than the other. A grounding type plug has two blades and a third grounding prong. The wide blade or the third prong are provided for your safety. If the provided plug does not fit into your outlet, consult an electrician for replacement of the obsolete outlet.
16. Only use attachments/accessories specified by the manufacturer.
17. Use only with the cart, stand, tripod, bracket, or table specified by the manufacturer,or sold with the apparatus. When a cart is used, use caution when moving the cart/apparatus combination to avoid injury from tip-over.
18. Unplug this apparatus during lightning storms or when unused for long periods of time.
19. Refer all servicing to qualified service personnel. Servicing is required when the apparatus has been damaged in any way, such as power-supply cord or plug is damaged, liquid has been spilled or objects have fallen into the apparatus, the apparatus has been exposed to rain or moisture, does not operate normally, or has been dropped.
20. USB Output rated to 0.5A under normal operation
21. Keep clear space of minimum distance as detailed below for sufficient ventilation
22. Use with caution in extreme or humid environments
23. Place TV in moderate temperature enviroments. Do not place near heaters, Air Conditioners or other sources of extreme temperature changes
24. When carrying or moving the TV, handle with care. Please use at least two hands or two people

Note: Parts of this manual may differ to actual unit

## WARNING

Never place a television set in an unstable location. A television set may fall, causing serious personal injury or death. Many injuries, particularly to children, can be avoided by taking simple precautions such as:

- Using cabinets or stands recommended by the manufacturer of the television set.
- Only using furniture that can safely support the television set.
- Ensuring the television set is not overhanging the edge of the supporting furniture.
- Not placing the television set on tall furniture (for example, cupboards or bookcases) without anchoring both the furniture and the television set to a suitable support.
- Not placing the televisions set on cloth or other materials that may be located between the television set and supporting furniture.
- Educating children about the dangers of climbing on furniture to reach the Television set or its controls.

If your existing television set is being retained and relocated, the same considerations as above should be applied.

## IMPORTANT INFORMATION

If a television is not positioned in a sufficiently stable location, it can be potentially hazardous due to falling. Many injuries, particularly to children, can be avoided by taking simple precautions such as:

- Using cabinets or stands recommended by the manufacturer of the television.
- Only using furniture that can safely support the television.
- Ensuring the television is not overhanging the edge of the supporting furniture.
- Not placing the television on tall furniture (for example, cupboards or Bookcases) without anchoring both the furniture and the television to a suitable support.
- Not standing the televisions on cloth or other materials placed between the television and supporting furniture.
- Educating children about the dangers of climbing on furniture to reach the television or its controls.

**⚠ CAUTION**

Danger of explosion if battery is incorrectly replaced.
Replace only with the same or equivalent type.
Batteries shall not be exposed to excessive heat such as sunshine, fire or the like.
Used batteries should not be thrown into the garbage can, please leave them at an appropriate depot.

**⚠ CAUTION**

Where the MAINS plug or an appliance coupler is used as the disconnect device, the disconnect device shall remain readily operable.

**⚠ CAUTION**

These servicing instructions are for use by qualified service personnel only. To reduce the risk of electric shock, do not perform any servicing other than that contained in the operating instructions unless you are qualified to do so.

## Attention:

Motionless picture might cause permanent destruction to the display.

- Be sure not to display motionless picture on the LED TV for more than 2 hours, because it would cause picture remnants to appear, which is called "screen burns". To avoid such picture remnants, please decrease the "contrast" and "brightness" of the display when displaying motionless picture.
- While watching TV program in 4:3 size mode for a long time, there would . be traces on the edge of the screen's left, right and center parts because of different transmission of the light on the screen.Similar impact on the screen will occur when playing DVD or connecting games console. Products destroyed by these reasons can't be guaranteed for maintenance.

- Place the TV on a firm and flat surface,leaving a space of at least 10cm around the set and 30cm from the top of the set to the wall or cabinet.Ensure the TV is positioned close to the wall to avoid it falling when pushed.

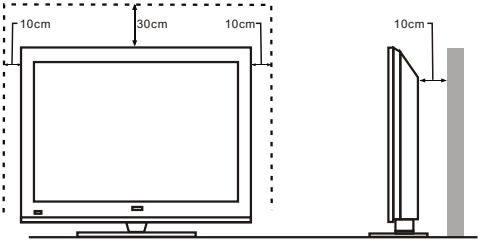


- When turning the TV unit, do not hold the TV unit from the top of the unit. Hold the TV unit from the bottom of the unit. As shown below

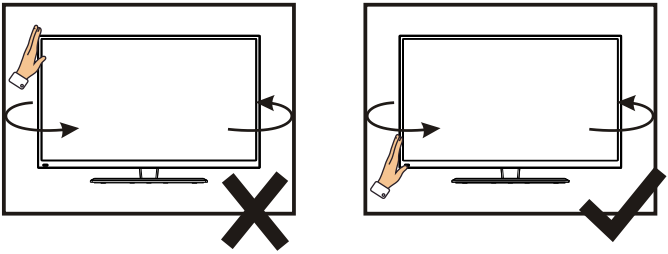

- When lifting the TV unit, do not use one hand to handle the TV unit. Lift the TV unit with two hands

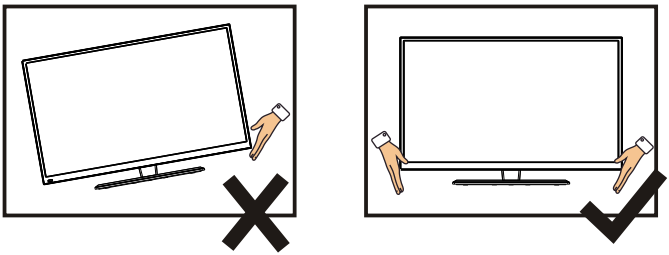

# CONTENTS

1. Connection and Preparation of TV.....2
1.1 Accessories .....2
1.2 Installation of Stand.....2
1.3 Wall Mount Specificatiolns ..... 3
1.4 Keys and Interfaces ..... 4
1.5 Remote Control.....5
1.6 Installation of Batteries.....6
2. Basic Operation.....6
2.1 Power ON/OFF(Optional).....6
2.2 Setting of Standby Mode.....6
3. Getting Started with webOS TV.....7
4. Setting .....8
5. Technical Specification..... 20
6. Supported Signal Modes ..... 21
7. Simple Troubleshooting .....22

# 1.Connection and Preparation of TV

## 1.1 Accessories

- User Manual
- Remote Control
- Battery(LR6/AA)
- Wall Mount Kit (Pre-assembled)(Optional)

## 1.2 Installation of Stand

(For the physical structure, please refer to the real object)

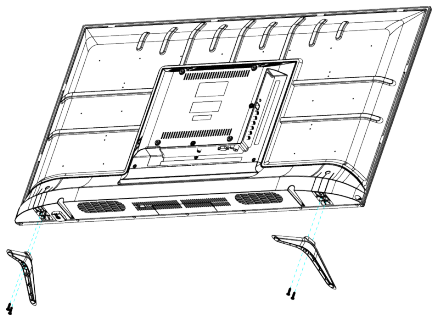

① Place the TV with the front panal facing downwards on a soft cloth or soft surface on a flat surface

② Insert the stand into the bottom socket of the TV.

③ Insert the screws into the sockets and tighten them.

## 1.3 Wall Mount Specifications

| Compatible wall-mount size | Screw size for connecting the TV to the wall mount |
|---|---|
| VESA 200*200mm | PWM4 screws, length 6 mm x 2 pcs*<br>PWM4 screws, length 12 mm x 2 pcs* |
| ** The length of the screw specified is only a recommendation; actual length required can vary depending on the type of wall mount used.* | |

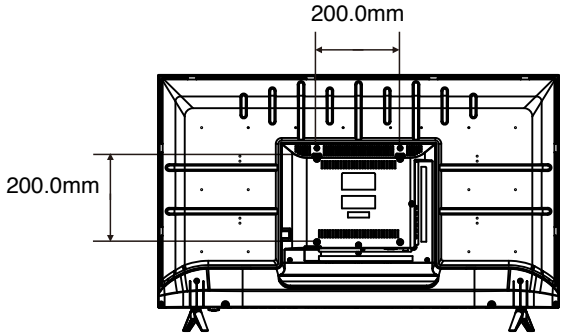


**Note:**

1. The wall mount is not included with the TV; it needs to be purchased separately.
2. Use only VESA-compatible wall mounts according to the specifications recommended for this model. Use of other wall mounts, or inappropriate installation may cause personal injuries or damage to the TV.
3. Please follow all instructions from the user manual of your chosen wall mount.

## 1.4 Keys and Interfaces

The design and specification takes actual products as the standard

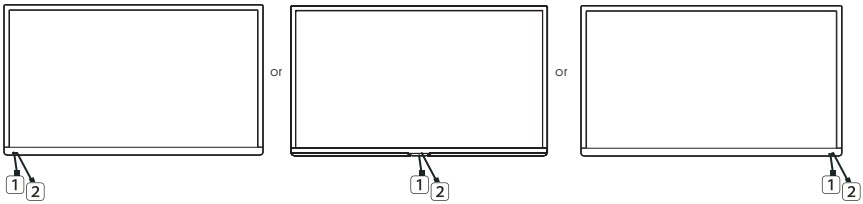


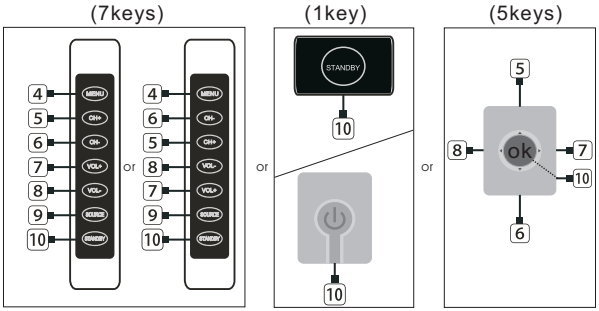


1. REMOTE SENSOR WINDOW
2. POWER INDICATOR
3. SPEAKER
4. MENU KEY
5. PROGRAM “+” KEY
6. PROGRAM “-” KEY
7. VOLUME “+” KEY
8. VOLUME “-” KEY
9. SOURCE KEY
10. STANDBY KEY

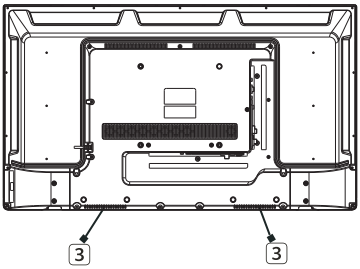

## 1.5 Remote Control

For buttons with #, please long-press (hold for more than a second).

**POWER:** ON/OFF.

**(STB POWER)**You can turn on/off the power of the set-top box.

**0-9:** Number **selection key.**

**0** # :The QUICK ACCESS edit screen appears.

LIST: Checking the saved programmes.

• • • :It displays the additional buttons on the remote control.

• • • #: Audibly describes the contents of the screen.

: It adjusts the volume level.

: Select to turn off the sound from the TV.

#: Enter the Accessibility menu.

: You can change the programme.

: Check out the recommended contents. (Recommendation ervice may not be available depending on the countries you are in.)

Push and hold the button while speaking to use the voice recognition function.

: Displays the Home menu.

#: Displays the list used previously.

: Enters the Quick Settings menu.

# : Enters the All Settings menu.

**Wheel (OK)** :Press the center of thd Wheel button to select a menu.You can change channels by using the wheel button.

**(up/down/left/right)** Press the up,down,left or right button to scroll the menu.If you press △▽◁ ▷ buttons while the pointer is in use,the pointer will disappear from the screen and Magic Remote will operate like a general remote control.To display the pointer on the screen again,shake Magic Remote the left and right.

: Move to the previous step.

# : Closes the menu.

GUIDE : You can check the programme.

NETFLIX : go to Netflix.

: Selects an input source.

#: Entering into the Home Dashboard.

prime video : go to prime video.

, , , These access special functions in some menus.

Play :FreeView Play APP Execution.

▷ : Play.

|| : Pause.

## 1.6 Installation of Batteries

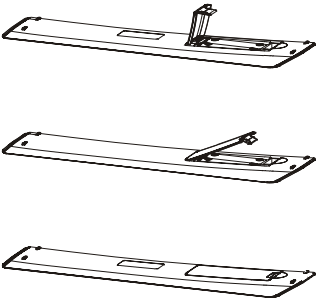

① Open the back lid of the remote control.

② Install two 5#(AA)1.5V, batteries.
Ensure the correct polarity of the batteries.

③ Cover the back lid.
Please take out of the batteries from the remote control for long time of no use.

If the remote control doesn't work properly, please carry out the following checks.

- Check the TV is turned on.
- Check the polarity of the batteries are correct.
- Check the batteries are not drained.
- Check the power supply is normal or the power cord is correctly connected.
- Check there are no special fluorescent light or neon light around.

# 2. Basic Operation

## 2.1 Power ON/OFF(Optional)

- Connect the power cord to the **AC input**. Insert the power cord into the appropriate socket.
- Press the **Power switch** to switch on the TV, then press **Power** button to turn on the unit.
- Press the **Power switch** again to switch off the TV.

Note: After switch off the TV, please don't immediately re-open the power switch ,should be delayed one minute more to re-open the power switch.

## 2.2 Setting of Standby Mode

- Press ( ⏻ ) button to turn on the unit.
- Press ( ⏻ ) button again to return the display to standby mode. The power indicator turns red.
- Be sure not to set your TV in standby mode for a long period of time.

# 3. Getting Started with webOS TV

## Home Tutorial

### Using the Home Feature of the webOS TV

You can open the Home screen by pressing the button on your remote control.Roll the Wheel (Ok) button on the Magic Remote to scroll through the menu. You can open apps and content or use various features of the smart TV.

■ Standard remote control allows you to scroll through the menu with the ▼/▲ buttons.

① Launch Search.
To see the details, click the Apps and Content Search in User Guide.

② Returns to the most recently used TV or external input.

③ You can run, move or delete the apps installed on your TV.

- App List is automatically shown on the screen each time the TV is turned on. To change the Home screen display, change the setting of Home Auto Launch in-> -> -> General->System->AdditionalSettings->Home Settings.
- The availability of and access to Contents and Services in the device are subject to change at any time without prior notice.
- Available features vary depending on the region or service.

# 4. SETTINGS

## Quick Settings

To Use Setting Function Quickly

Set of light-weight controls quickly and simply such as Picture Mode, Sound Out, Game Optimiser and so on.

Press the button on the remote control.

① You can set Picture Mode.
② You can set Sound Mode.
③ You can choose Sound Out.
④ Directs to the Game Optimiser settings.
⑤ Directs to the Network settings.
⑥ You can set more options.

- You can also long-press button of the remote control to run the All settings directly.

⑦ You can add/delete the quick setting items or change their order.

- Move to an item that can be set up, press the remote control's Wheel (OK) button once, and then press and hold the Wheel (OK) button to move to the menu.
- The configurable items differ depending on model.

# SETTINGS

## Picture

### *Picture Mode*

Selecting Picture Mode

-> -> Picture -> Select Mode

Select the picture mode that is best suited to your viewing environment, preferences or video type.
Select a picture mode. By adjusting and setting each item in more detail based on the mode, your video is better optimised for its characteristics.

- The configurable items differ depending on model.

### *Aspect Ratio*

Setting the Screen Size

-> -> Picture -> Aspect Ratio -> User Selection

You can change the screen size according to the type of content you are watching.

### *Advanced Settings*

Brightness

-> -> Picture -> Advanced Settings -> Brightness

You can adjust the brightness of the entire screen.

Colour

-> -> Picture -> Advanced Settings -> Colour

Clarity

-> -> Picture -> Advanced Settings -> Clarity

You can adjust the contrast of a Picture to show it more clearly.

Apply to all inputs

-> -> Picture -> Advanced Settings -> Apply to All Inputs

The settings you specify only apply to the currently selected input mode.
To apply your current picture settings to all input modes, select Apply to All Inputs.

Reset

-> -> Picture -> Advanced Settings -> Reset

If you want to reset the image settings to the factory defaults after configuring the image settings, select reset for each image mode.

# SETTINGS

## Sound

### *Sound Mode*

-> -> Sound -> Select Mode

You can select the most suitable sound mode for each genre.

### *Sound Out*

Use TV Speaker

-> -> Sound -> Sound Out -> Use TV Speaker

Audio is played through the TV's internal speakers.

Use Wired Speaker

-> -> Sound -> Sound Out -> Use Wired Speaker

Use Wireless Speaker

-> -> Sound -> Sound Out -> Use Wireless Speaker

Bluetooth Device

Wirelessly connect a Bluetooth audio device to enjoy TV sound more conveniently.

Refer to the user manual of the Bluetooth audio device for details on how to connect and use the device.

- Press to view the connected devices or the devices that can be connected to connect any one of them.
- For some Bluetooth devices, the device volume can be controlled by selecting from the connection list.
- LG Sound Sync devices will automatically try to connect to the recently used devices when you turn the TV on.
- We recommend that you connect an LG audio device that supports LG Sound Sync, using LG TV mode or LG Sound Sync mode on device.

- Some models may not be supported.
- The audio codec that can be output via Bluetooth is SBC/aptXTM.
- If the device fails to connect, check the power of the device to connect to and check if the audio device is working properly.
- Depending on the type of the Bluetooth device, the device may not connect correctly or abnormal behavior may occur such as unsynchronized video and audio.
  - The mobile-only headsets may not work.
- Sound may stutter or sound quality may be reduced if:
  - the Bluetooth device is too far from the TV;
  - there are obstacles between the Bluetooth device and the TV; or
  - used together with radio equipment such as a microwave oven or wireless LAN
- If the Picture -> Select Mode is set to Game Optimiser and Sound Out is set to Bluetooth Device, the Picture -> Select Mode changes to Standard.
- If you continue to experience problems, we recommend using a wired connection. ( Optical digital, HDMI (eARC/ARC) port )

# SETTINGS

Mobile Device

If you install the LG ThinQ app on a smart device and connect it to your TV, you can use the device as a speaker for the TV.

Use External Speakers with TV Speaker

-> -> Sound -> Sound Out -> Use External Speakers with TV Speaker

Audio can be played through the multiple devices simultaneously.

## *Advanced Settings*

Balance

-> -> Sound -> Advanced Settings -> Balance

You can adjust the volume of the left and right speakers.

- This setting is only available for Internal TV Speaker.

Equalizer

-> -> Sound -> Advanced Settings -> Equalizer

You can adjust the sound by increasing or decreasing the output of the specific frequency range of the voice signal.

- This option can be enabled if Sound -> Select Mode is set to Standard.
- This setting is only available for Internal TV Speaker.

## Apply to all inputs

-> -> Sound -> Advanced Settings -> Apply to All Inputs

The settings you specify only apply to the currently selected input mode.
To apply your current sound settings to all input modes, select Apply to All Inputs.

Reset

-> -> Sound -> Advanced Settings -> Reset

Restores the detailed effect settings for the Standard sound mode to the initial settings.

- This setting is only available for Internal TV Speaker.

Installation Type

-> -> Sound -> Advanced Settings -> Installation Type

This mode optimises the sound based on the TV setup.

Autamatic Volume Adjustment

-> -> Sound -> Advanced Settings -> Automatic Volume Adjustment

If it is set to On, the volume will be automatically adjusted to a suitable level for each content you watch to help you enjoy watching more comfortably.

- This setting is only available for Internal TV Speaker.

DTV Audio Setting

-> -> Sound -> Advanced Settings -> DTV Audio Setting

# SETTINGS

When different audio types exist in an input signal, this function allows you to select the audio type you want.

If set to Auto the search order is AC4 → HE-AAC → Dolby Digital Plus → Dolby Digital → MPEG and output is produced in the first Audio Format found.

- The following search order may change depending on the country : AC4 → HE-AAC → Dolby Digital Plus → Dolby Digital → MPEG.
- If the selected Audio Format is not supported, another Audio Format may be used for output.
- Some models may not be supported.

### Match Screen and Sound

-> -> Sound -> Advanced Settings -> Match Screen and Sound

Adjusts the synchronization of the sound from the speaker that is working.
The closer the value is set to 60, the slower the voice output speed will be than the default speed.

### Select HDMI Input Audio Format

-> -> Sound -> Advanced Settings -> Select HDMI Input Audio Format

You can set the audio format for each HDMI input.
When connected to devices or content that support the latest surround sound technology, setting to Bitstream will enable you to listen to the intended sound quality.
When the voice delivered through the HDMI port is not synchronized, set it to PCM.

### LG Sound Sync

> -> Sound -> Advanced Settings -> LG Sound Sync

Connect the LG Sound Sync device to the optical digital input port and set Sound Out to Optical Out Device.
By setting this feature to On, you can adjust the volume of the connected LG Sound Sync device using a TV remote control.

- If the auto-power feature of the sound bar that supports LG Sound Sync is set to On, the sound bar will be turned on or off together when the TV is turned on or off.

### Digital Sound Output

-> -> Sound -> Advanced Settings -> Digital Sound Output

You can configure the Digital Sound Output settings.

### eARC Support

-> -> Sound -> Advanced Settings-> eARC Support

eARC is a technology that can send and receive more sound information faster thanks to its wider bandwidth than that of the conventional ARC. You can enjoy TV sound with higher quality than ARC through a connected audio device.

# SETTINGS

## GENERAL

### *AI Service*

-> -> General -> AI Service

AI Recommendation

-> -> General-> AI Service -> AI Recommendation

You can get content recommendation messages according to your content viewing history and app usage history.

### *Game Optimiser*

Sets up the features for an immersive experience when you play with a video game console.

1) Press the button on the remote control.
2) Select Game Optimiser.
3) Selecting On turns on all related settings.

- It only works with HDMI inputs.
- If you set -> -> Picture -> Select Mode to a mode other than Game Optimiser, some items in Game Optimiser cannot be set.
- If you turn this feature On, you cannot change some video settings items.
- When GameOptimiser is set to On, audio delays may occur if you set Sound Out to Bluetooth Device/Optical OutDevice/HDMI(ARC) Device. Switch to Use TV Speaker or change -> -> Sound -> Advanced Settings -> Select HDMI Input AudioFormat to PCM.
- The configurable items differ depending on model.

### *Programmes*

Programme Tuning & Settings

-> -> General -> Programmes -> Programme Tuning & Settings

Auto Tuning

-> -> General -> Programmes -> Programme Tuning & Settings -> Auto Tuning

Automatically tunes the programmes.

Manual Tuning

-> -> General -> Programmes -> Programme Tuning (Programme Tuning & Settings) -> Manual Tuning

This function is for manually searching and saving programmes.
For digital broadcasting, signal strength and signal quality can be checked.

# SETTINGS

*Programme Mode*

→ → General -> Programmes→Programme Tuning &Settings→Programme Mode

Select programme tuning modes.

*Programme List Update*

→ → General -> Programme→Programme Tuning & Settings→Programme List Update

If the programme mode is set to Cable.

It updates the changed Programme List information by based on country broadcasting circumstance. After updates, the Programme List may be changed. If not want, select Off.

Signal Test

-> -> General -> Programmes -> Programme Tuning (Programme Tuning & Settings) -> Signal Test

Shows the MUX and Service information etc.

- Signal test is only available in Antenna or Cable mode.
- Some models may not be supported.

Programme Manager

-> -> General -> Programmes -> Programme Manager

Edit All Programmes

-> -> General -> Programmes -> Programme Manager -> Edit All Programmes

You can lock or unlock the selected programmes from all the stored programmes, or you can set them to be skipped when switching programmes.

Edit Favourites

-> -> General -> Programmes -> Programme Manager -> Edit Favourites

You can add/delete desired programmes to/from the favourite programmes, change their positions, etc.

CI Information

-> -> General -> Programmes -> CI Information

This function enables you to watch some encrypted services (pay services).

Copy Programmes

-> -> General -> Programmes -> Copy Programmes

Export your TV's programme list information to a connected USB storage device or Import your TV's programme list information from a connected USB storage device.

- For Satellite models

# SETTINGS

HbbTV

-> -> General -> Programmes -> HbbTV

HbbTV (Hybrid Broadcast Broadband TV) is a new broadcasting standard that enables super-teletext type services, delivered by a broadcast TV programme, to be integrated or linked to online services delivered over broadband to a connected Smart TV.

- Some models may not be supported.

## *Devices*

TV Management

-> -> General -> Devices -> TV Management

External Device

-> -> General -> Devices -> External Devices

You can set to use a smart device connected to the TV to control the TV or manage the connection history.

- The configurable items differ depending on model.

**Connect Bluetooth Controller**

You can connect and use devices such as a Bluetooth-enabled keyboard, mouse, or a gamepad with your TV.

Turn on the device, set it to pairing mode, and then click Connect on your TV screen. When a device you've connected before is turned on, it automatically connects to your TV. To disconnect the existing connection, click Disconnect.

**Universal Control Settings**

If you set up the universal remote control, you can control peripheral devices connected to the TV with the Magic Remote instead of their own remote controls.

For more information, see How to Operate TV -> Using Universal Remote Controlin User Guide.

**TV On With Mobile**

If Turn on via Wi-Fi or Turn on via Bluetooth is set to On, you can turn on your TV using an application that supports TV On With Mobile.

**Delete Connection History**

You can delete the connection history of the devices connected to the TV on the wireless network.

HDMI Settings

> -> General -> Devices -> HDMI Settings

You can apply settings to ensure a clear picture and easy control for the HDMI connected devices.

# SETTINGS

## *Network*

Setting a Wired Network

-> -> **General -> Network -> Wired Connection (Ethernet)**

If the router connected to the network supports the DHCP feature, connecting the TV and router by wire will automatically connects to the network. If the automatic setup is not supported, you can select Edit to manually set up the network connection.

Setting a Wireless Network

-> -> **General -> Network -> Wi-Fi Connection**

If you have set the TV up for a wireless network, you can check and connect to the available wireless Internet networks. Select the wireless router to connect.
For more detailed settings, select Other Network Settings.

## *System*

Language

-> -> General -> System -> Language

You can choose the menu language displayed on the screen and the audio language of the digital broadcast.

Location

-> -> General -> System -> Location

You can change the location setting of your Smart TV.

Time & Timer

-> -> General -> System -> Time & Timer

You can check the time or configure related settings.

Safety

-> -> General -> System -> Safety

You can put a lock on TV broadcasts or apps.
Set it to On to apply the lock.

# SETTINGS

**TV Rating Locks**

This function operates according to information from the broadcasting station. Therefore if the signal has incorrect information, this function does not operate.
Prevents children from watching certain adult TV programmes, according to the ratings limit set. Enter a password to watch a blocked programme. Rating differs by country.

- Supported only in the digital mode.
- Some models may not be supported.

**Programme Locks**

Blocks programmes that contain inappropriate content for children. The programmes can be selected but the screen is blank and the audio is muted. To watch a locked programme, enter the password.

**Application Locks**

You can lock or unlock the application.
The lock function is not immediately available for the currently running application.

**Input Locks**

You can lock or unlock the Inputs.

**Reset Password**

Set or change the password for the TV.
The default password is set as “0000”.
When France, Norway or Belgium is selected for Country, the password is not “0000” but “1234”.

Resetting a Lost Password

If you lose the password you set, you can reset it as follows:

① Press the button on the remote control.

② Select General System Safety.

③ Press (Programmes)

-> (Programmes) -> (Programmes) -> (Programmes) on the remote control. The master password input window will appear.

④ Enter the numbers “0313” in the master password input window, then press OK. The password will be reset.

LG Account

You can sign up for LG membership and log in with your email address in LG Account.
For more information, see Getting Started with webOS TV -> Managing Your LG Account in User Guide.

Additional Settings

Notifications

-> -> General -> System -> Additional Settings -> Notifications

# SETTINGS

You can view or delete notifications from TV apps and services. For notifications that support shortcuts, you can go directly to that app or website.

### Home Settings

-> -> General -> System -> Additional Settings -> Home Settings

### Standby Light

-> -> General -> System -> Additional Settings -> Standby Light

You can turn the standby light on or off.

- Some models may not be supported.

### Pointer Options

-> -> General -> System -> Additional Settings -> Pointer Options

You can set the pointer speed and size you want while it is on the screen.

### Advertisement

-> -> General -> System -> Additional Settings -> Advertisement

If your TV is connected to the Internet, webOS may use a frequency capping cookie to keep track of the number of times an ad is shown on your TV.
This information is used to help limit the number of times the same ad is displayed. You can clear this cookie or turn it on or off at any time by going to the Advertisement setting on your TV.
No personally identifiable information is tied to this cookie.

### Live Plus

Live Plus is a service that provides various information on the programme you watch.
To see the details, click the Making the Most of Smart TV -> Live Plus in User Guide.

- Some models may not be supported.

### Settings Help

-> -> General -> System -> Additional Settings -> Settings Help

When set to On, you can get help for the selected items when navigating through the Settings menu.

### Set ID

-> -> General -> System -> Additional Settings -> Set ID

You can set a number (ID) to manage multiple TVs.

- This feature is for administrators. It is not recommended for use in a typical home environment.

### Reset to Initial Settings

-> -> General -> System -> Reset to Initial Settings

Return TV to its initial settings. After reset, the TV will automatically turn off and on.

# SETTINGS

## Support

### *Software Update*

-> -> Support -> Software Update

Uses software update to check and obtain the latest version.

**Auto Update**

When it is set to On, updates are automatically made without a separate confirmation procedure except for some important updates.

**Check for Updates**

When checking for the latest update version, you can only perform updates if an update file of a later version is available. The TV automatically checks your software version but, if necessary, you can perform a manual check.

- The configurable items differ depending on model.
- The latest version can be obtained via digital broadcast signals or internet connections.
- Changing the programme while downloading the software via digital broadcast signal interrupts the download process. Returning to the initial programme allows downloading to resume.
- If software is not updated, certain functions may not work properly.
- In some countries, Auto Update is not displayed if you are not connected to the Internet.

### *Privacy & Terms*

-> -> Support -> Privacy & Terms

**User Agreements**

These are the terms and conditions related to use of the Smart TV service and protection of privacy.

**Legal Notice**

It's a legal notice for services provided via TV.

**Open Source Software Notice**

You can view the instructions for each item.

# 5.Technical Specification

| | | |
|---|---|---|
| Product Model | JB-43CE1811HD | |
| Screen Size | 43" diagonal | |
| Aspect Ratio | 16:9 | |
| Power Supply | AC 100-240V~,50/60Hz | |
| Power Consumption | 85W | |
| TV System | PAL B/GD/K I,SECAM B/G D/K DVB-T/T2/C/S/S2(s/s2 option)<br>(There is no DVB-C signal in some Countries or Areas.) | |
| Audio Output Power (Internal) | 8W x 2 | |
| Input Terminal | Antenna Input | x 2 (S2 option) |
| | USB Input | x 2 |
| | HDMI Input | x 3 |
| | VGA Input | NO |
| | PC AUDIO Input | NO |
| | Audio Input (L/R) | x 1 |
| | Video Input | x 1 |
| | YPbPr Input | NO |
| | RJ45 Input | x 1 |
| | CI card In | x 1 |
| | SCART In/Output | NO |
| | DC In (12V) | NO |
| Output Terminal | Earphone | x 1 |
| | Audio Line Out(L/R) | NO |
| | Video Output | NO |
| | Optical | x 1 |
| | Coaxial out | NO |
| Working Temperature | 0℃~40℃ | |
| Working Humidity | 20% ~ 80% Non-condensing | |

*Note:The specification shown above may change without notice for quality improvement.*

Dolby AUDIO

Manufactured under license from Dolby Laboratories. Dolby, Dolby Audio, and the double-D symbol are trademarks of Dolby Laboratories Licensing Corporation.

# 6. Supported Signal Modes

## A.HDMI Mode

| Resolution | Horizontal Frequency (Khz) | Vertical Frequency (Hz) |
|---|---|---|
| 480p | 31.468 | 59.94 |
| 576p | 31.25 | 50.00 |
| 720p | 45.00 | 60.00 |
| 1080i | 33.75 | 60.00 |
| 1080p(1920x1080) | 67.50 | 60.00 |
| 2160p(3840x2160) | 67.50 | 30.00 |
| 2160p(3840x2160) | 135.00 | 60.00 |

*-When the signal received by the Display exceeds the allowed range, a warning message will appear on the screen.*
*-You can confirm the input signal format on screen.*

HDMI™
HIGH-DEFINITION MULTIMEDIA INTERFACE

The terms HDMI, HDMI High-Definition Multimedia Interface, HDMI trade dress and the HDMI Logos are trademarks or registered trademarks of HDMI Licensing Administrator, Inc.

# 7. Simple Troubleshooting

If the display fails or the performance changes dramatically, check the display in accordance with the following instructions. Remember to check the peripherals to pinpoint the source of the failure.

| Symptom | Solution |
|---|---|
| Power cannot be turned on.(Power indicator does not light.) | -Check that both ends of the power cable are plugged into the socket appropriately and the wall socket is operational |
| No Input Signal message appears. | -Check that the signal line is connected properly.<br>-Check that the power of the relevant peripherals is turned on.<br>-Check that the Input option that has been selected matches with the input signal. |
| The remote control does not function properly. | -Check the batteries are not drained.(Use new batteries.)<br>-Check that the remote control is within the operating range.<br>-Check that the remote control is pointed to the remote control window on the display.<br>-Check that there are no obstacles between the remote control and the remote control window. |
| Flashing spots or stripes appear on the screen. | -Check that there are no emission (Car, HV cable or Neon lamp) or other possible interference sources. |
| Image colour or quality deteriorates. | -Check that all the video settings are adjusted appropriately, such as brightness, contrast, colour etc.<br>-For more information about video settings, refer to OSD Functions in Chapter 2. |
| Screen position and size are incorrect. | -Check that the screen position and size is adjusted appropriately. |
| Image or colour is incorrect. | -Check that the signal line is connected properly.<br>-When connecting to a PC, you can change the resolution of the PC to acquire the correct image. The discrepancy of the PC output signal may affect the display of the image. |
| Display warning message. | -Check that the input signal line is properly fixed.<br>-Select the correct input signal.<br>-For more information, refer to Supported Signal Modes in Chapter 4. |